RODEO Q ISLAND
SPEC SHEET

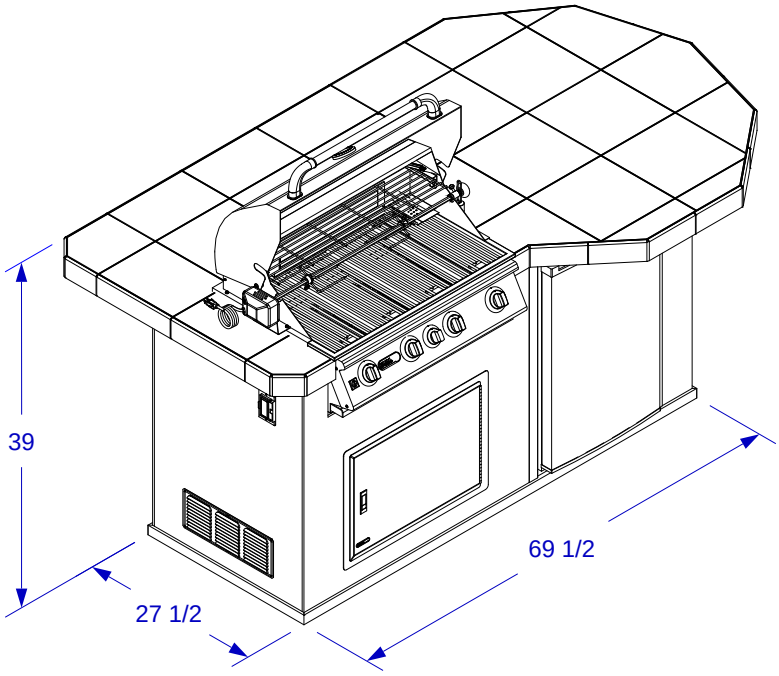

ISOMETRIC VIEW

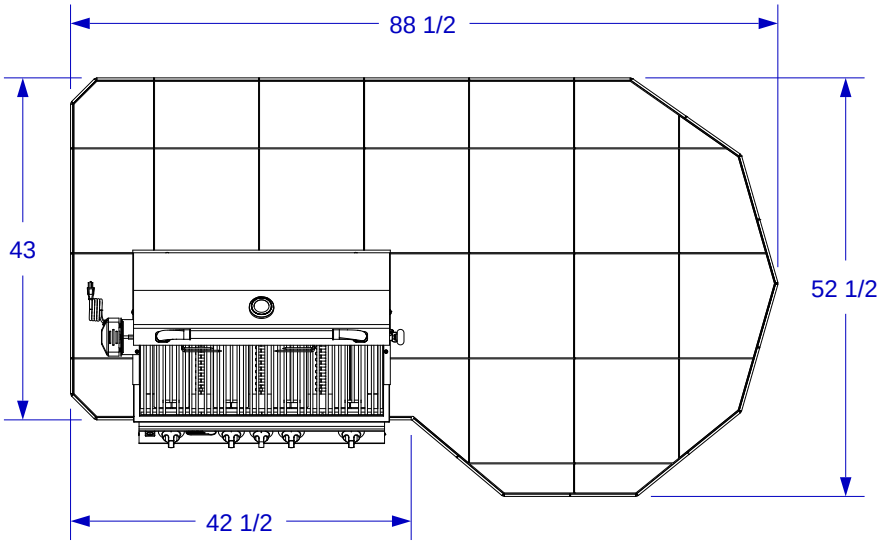

TOP VIEW

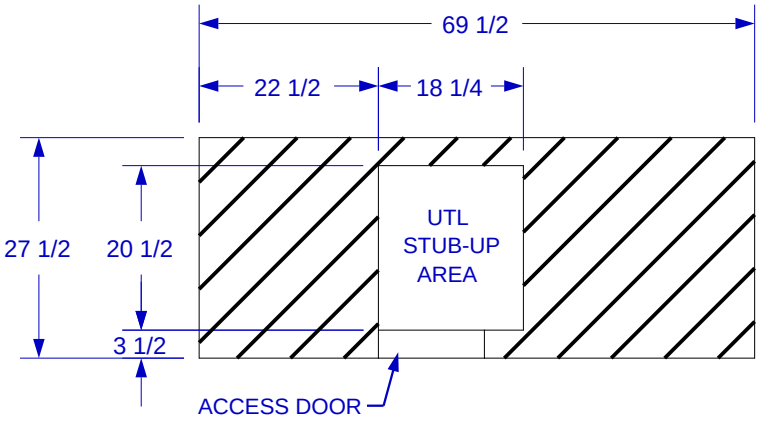

STUB-UP DIAGRAM
(SEE NOTE #2)

NOTES:
1. FOR ROCK FINISHES, ADD 1 1/2" ON ALL BASE SIDES.
2. 6" MAX HEIGHT ON ALL STUB-UPS.
3. SHOWN WITH STANDARD 4-BURNER ANGUS GRILL.
4. SCALE: 1/2" = 1'-0"
5. REVISION: 10/2011